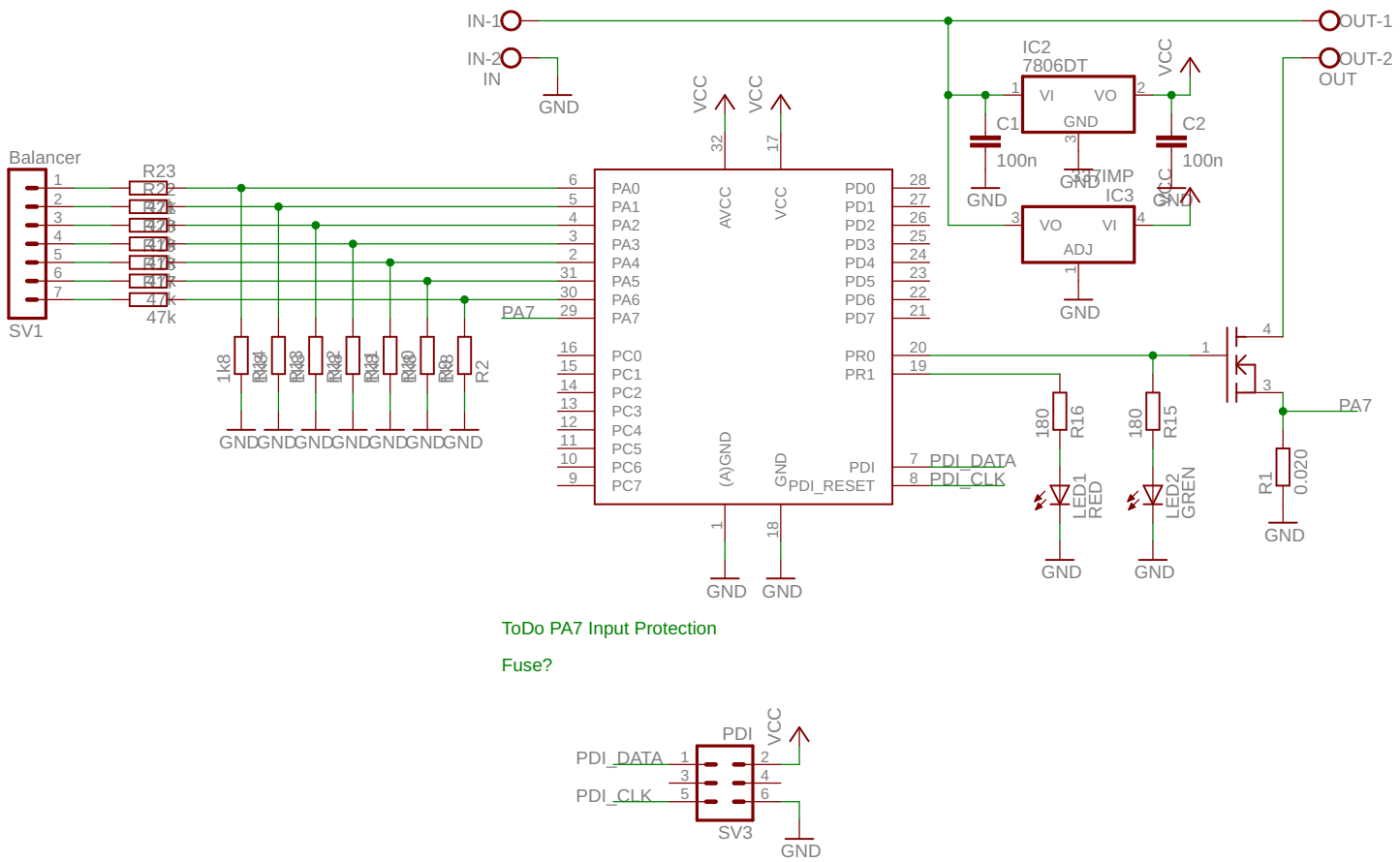
IN-1
IN-2
IN
GND
OUT-1
OUT-2
OUT
IC2
7806DT
VI
VO
GND
C1
100n
C2
100n
IC3
ADJ
VCC
Balancer
SV1
R23
47k
1k8
R2
PA7
PA0
PA1
PA2
PA3
PA4
PA5
PA6
PA7
PC0
PC1
PC2
PC3
PC4
PC5
PC6
PC7
AVCC
(A)GND
PD0
PD1
PD2
PD3
PD4
PD5
PD6
PD7
PR0
PR1
PDI
PDI_RESET
PDI_DATA
PDI_CLK
180
R16
R15
LED1
RED
LED2
GREN
R1
0.020
ToDo PA7 Input Protection
Fuse?
PDI
SV3